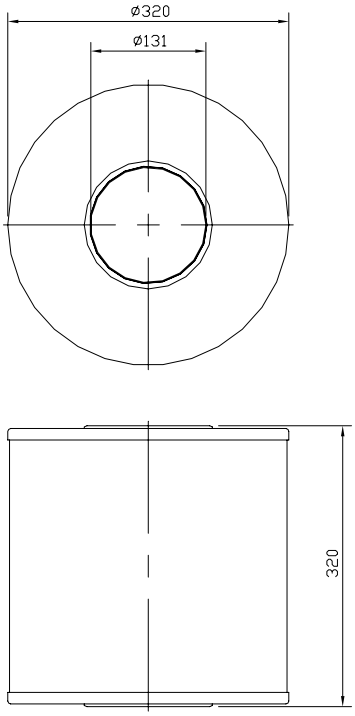

OPERATING CONDITIONS

COLLAPSE PRESSURE: 10 BAR
BURST PRESSURE:
MAX. OPERATING TEMP.: 120°C

DRAWN:	SGM	© VOKES Ltd						HENLEY PARK - GUILDFORD - SURREY - GU3 2AF TEL: +44 (0) 1483 569971 - FAX: +44 (0) 1483 235384			
CHECKED:	PT	VOKES THIRD ANGLE PROJECTION		TITLE:				MICROFELT XL CARTRIDGE			
APPROVED:	VKS	DATE:	26/10/95	SCALE:	1:4	DRG. No:	Size A	-6370070	Rev. 3	Sht. 2	of 2